Magnetic Levitation System Schematic

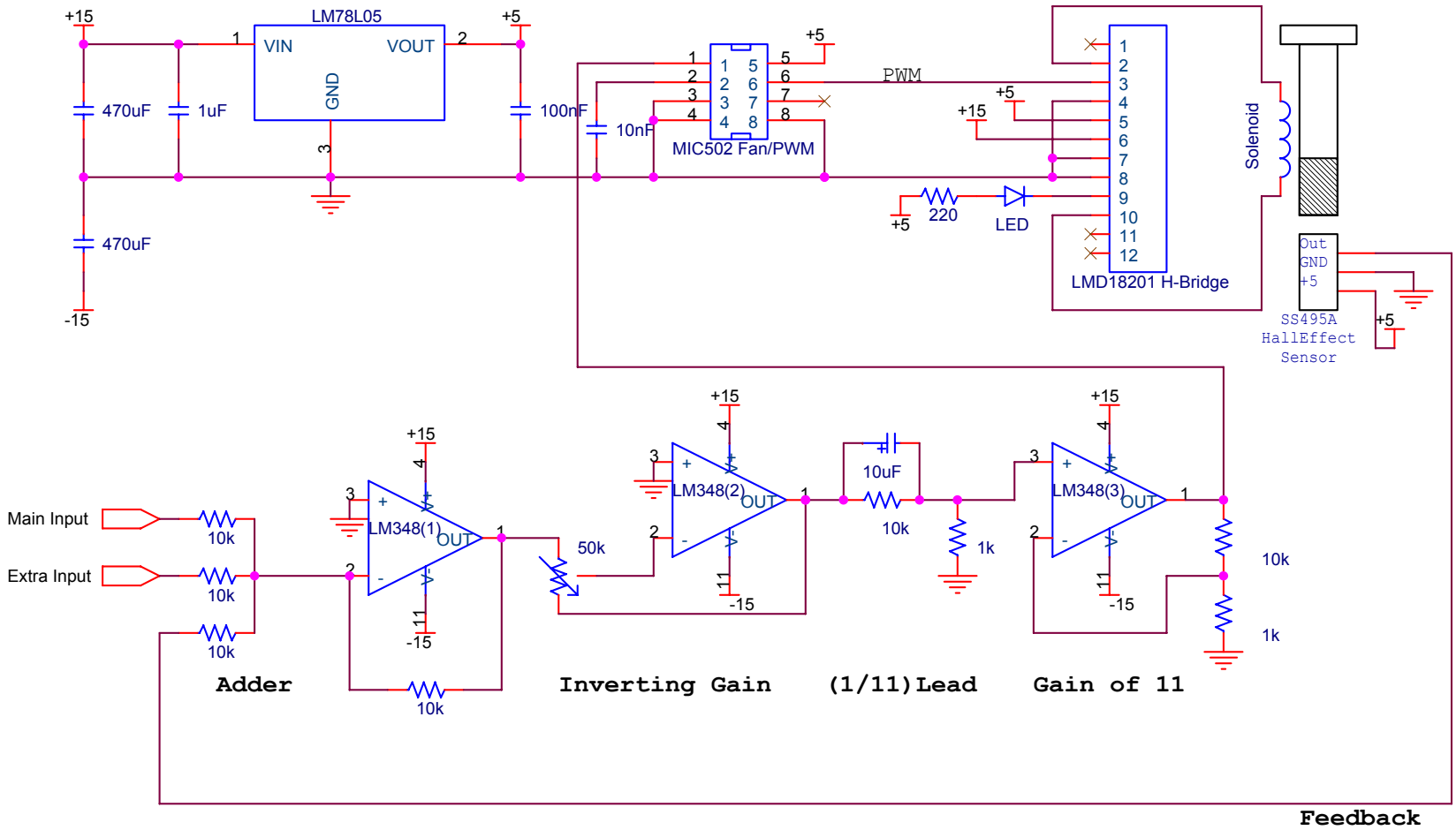

Title	Magnetic Levitation System	
Size A	Document Number 6.302 - Lab 3	Rev 1
Date: Friday, December 05, 2003	Sheet 1 of 1	